DO NOT SCALE THE DRAWING

ALL DIMENSIONS ARE IN mm

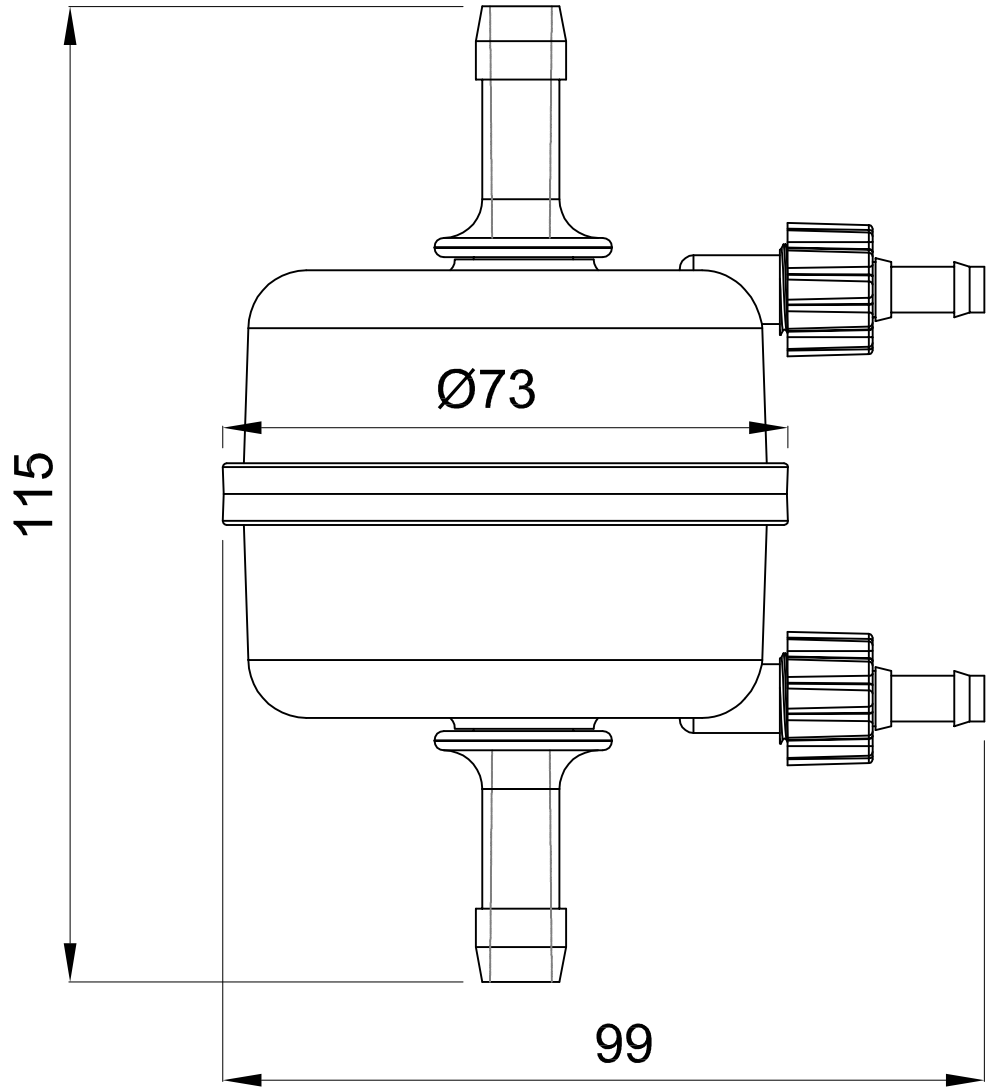

PART	QUANTITY	REF. NO.	DESCRIPTION	MATERIAL	FINISHED SIZE	HARDNESS	REMARK

REV. NO.	ECN. NO.	DATE	DESCRIPTION	REV. NO.	ECN. NO.	DATE	DESCRIPTION

mdi Advanced Microdevices Pvt. Ltd. 20, 21, Industrial Area , Ambala Cantt., 133006

2" Capsule Filter With ⅜" Single Step Hose Barb I/O

REV. NO.

FORMAT NO. 5

SCALE NONE

SPC CONTROL

PROJ.

	DATE	SIGN.
DRAWN		
DESIGNED		
CHECKED		
APPROVED		

TOLERANCE UNLESS SPECIFIED

	1Dec.Pl	2Dec.Pl	3Dec.Pl	4Dec.Pl
C	A±0.100	A±0.050	A±0.025	A±0.010
T	A±0.050	A±0.025	A±0.010	A±0.000
S				
ANGLE	A±2Â°	A±2Â°	A±2Â°	A±2Â°

TOOL No. | COMP. No. | STORE No. | SHEET 1 OF 1